Northern NY Agricultural Development Program
2009 Project Report

Project Title: **Cold Hardy Hybrid Wine Grapes: Cropping, Vigor Management, Wines.**

Project Leader: Kevin Iungerman, CCE Northeast NY Commercial Fruit Program.

Collaborators. Dr. Justine Vanden Heuvel, Dept. of Horticultural Sciences, Grape Program. Dr.Wayne Wilcox, Cornell Department of Plant Pathology. Dr. Tim Martinson, Cornell Statewide Viticulture Extension Program. Dr. Anna Katherine Mansfield and Chris Gerling, Department of Food Science, Enology. Mike Davis, farm manager, Cornell Baker Farm, Willsboro. Steven Lerch, Cornell Grape Program, Geneva. Extension Associations and Fruit Growers of CCE's NENY Commercial Fruit Program. Lake Champlain Grape Growers Association and Willsboro and NENYF volunteers.

Cooperating Producers:

County	Producer	Farm/Vineyard	City/Town	State
Albany	Mike DiCrescenzo	Altamont Vineyard	Altamont	NY
Clinton	Phil Favreau	Stone House Vineyard	Mooers	NY
Clinton	Mary and Gilles Fortin	Amazing Grace Vnyrd.	Chazy	NY
Clinton	Erwin Kalmar	(New 2009. Unnamed)	Champlain	Que.
Clinton	Richard Lamoy	Hid-in-Pines Vineyard	Morrisonville	NY
Clinton	Rob McDowell	Purple Gate Vineyard	Plattsburgh	NY
Clinton	N. Peck, C. Read	North Star Vineyard	Mooers	NY
Clinton	Dan Vesco	Vesco Ridge Vnyrd.		
Essex	W. & K. Reinhardt	Blue Stone Vineyards	Willsboro	NY
Essex	Peter Rowley	Edgewater Farm	Willsboro	NY
Essex	Todd Trzaskos	Vermont Logic	(Essex Land)	VT
Saratoga	Mike Spiak	Kayaderosseras Vnyrd.	Greenfield Cen.	NY
Washington	Gerry Barnhart	Victoryview Vineyard	Schatigcoke	NY
Washington	Ken Denberg	Natural Selection Farm	Cambridge	NY
Washington	S. Knapp, D. Wilson	Slyboro Ciderhouse	Granville	NY
Orange	Ed Lincoln	Maple Gate Farm	Randolph	VT

Background: The 300-vine Willsboro Wine Grape Trial was planted in 2005 to comparatively evaluate 25-hybrid cold-hardy-wine-grape-cultivars. It has had the support of private and also land-grant collaborators. Notable funding support has come from Cornell Extension NYFVI and NNADP.

During 2005, 2006, and 2007, the vines were minimally maintained to ensure good growth and establishment, not cropping. In 2006, growth performance and vine pruning and training practices largely leveled initial differences of vine condition owing to differences stemming from original procurement. One cultivar, Petite Amie, was successful re-established from cuttings.

(See prior 2008 report for more information). The small 2007 crop - and even smaller 2006 crop- were utilized for purposes of identification and grower education not yield, as the vines were still juvenile, and only small token crop were carried to ensure acclimation going into the winters. (2006-2007; 2007-2008).

The fall 2007 acclimation period was outstanding, superior to 2006. Unfortunately, the 2007 - 2008 winter, and indeed all of the winters from 2005-2006 through December 2009, have been milder than historical norms. Contrary to expectations, virtually all of the grapes in the trial have to-date done well and virtually all have begun to produce.

In 2008 a more rigorous vine Phenology notation and pest management-monitoring regimen was instituted to support year-to-year review, and increased cropping levels and the first wine production in 2008. Both were made possible via the hiring of Richard Lamoy, the on-site 0.25 time seasonal assistant (technician). Lamoy greatly aided maturity assessment from mid-August through the September and October harvest period, and prepared juice samples for analysis at the Geneva Experiment Station.

Our June 4, 2008 day-long "Cold Climate Viticulture: Wines & Vines in the North Country" conference at Willsboro's Noblewood Park Center was well received by the 75 persons in paid-attendance. The program was repeated at the Jefferson County CCE office in Watertown on June 5.

Wines were made for the first time from some of the more promising Willsboro grapes at the Cornell Wine Lab. Results and public wine tasting and evaluation session indicated that locally made quality wines were indeed possible. The wines made were Marquette, MN 1200, Sabrevois, St. Croix, and Frontenac (reds) and ES 6-16-30, LaCrescent, Petite Amie, NY 76.844.24, Prairie Star, and St. Pepin (whites).

In sum, in each year, volunteers have been invaluable in the annual tasks of vine tying, pruning, and training; bird netting and removal, harvests, and many other seasonal tasks. These tasks have been the foundation for our "working seminars", where the format is learning by "doing", and by "in-process" discussion and give and take questioning. These and periodic field or formal sessions with Cornell Extension and College personnel, and experienced practitioners, have been the foundation for viticulture technical information to new practitioners in Northeastern NY.

2009 Results: In April and May of 2009, live node evaluations (as reported in the June Addendum to the 2008 report, Table 2) did indicate, that despite our continuing warmer than historical normative winters, differential winter injury levels were beginning to show up - but not conclusively.

We had originally included " indicator" vines in the trial: ones we thought tender for the Champlain region, and which we expected to winterkill. To-date they have not - they survive and crop - though injury is being seen. Several examples of these are Cayuga White, (nearly 60% dead nodes). Landot (25% dead), our "Not-Ravat" (a misidentified, unknown vine with 29% dead nodes), Noiret (26%),

On the other hand, Niagara only had 14% dead nodes which was not far removed from "hardier" nominees such as Edelweiss (13%) Prairie Star (12%) or ES 6-16-30 (12%). Frontenac, Frontenac Gris, LaCrescent, Louise Swenson had minimal dead nodes (fewer than 8%), and Petite Amie, St. Croix, Marquette, and MN 1200, had fewer still, at 6%, 5%, 4%, and 3%. We will be evaluating nodes again in April and May 2010. Stay tuned.
(We note again that the spring frost pattern appears to be emerging as the greater cold threat to wine grapes in the region than absolute winter cold. Fortunately, many of these hybrids are very fruitful even from secondary buds)

As noted in the 2008 report, Dr. Bruce Bordelon of Purdue University has shown that both adequate production levels and good brix levels are necessary for recouping vineyard establishment and production costs.

To wit: Twelve years of production levels at 5 tons per acre and wholesale grape prices of $600 per ton will recoup the investments, and it will happen in nine years if a price of $700 per ton is secured. Grape sugar content is the key to factor influencing market pricing - and volatility, capable of moving price from 50% to as much as 125.

One goal of 2009 was to more extensively employ canopy management techniques to address both concerns: to reduce excessive crop loads (which would diminish sugar levels) and to reduce sub-par production levels, which would retard investment recovery. More open and balanced canopies would also better position the grapes for sun exposure and better air circulation and drying, thereby promoting healthier berries; the same outcomes would also serve to reduce protectant expenditures.

Our approach then was to do some cluster thinning (very labor intensive) but primarily to employ stepped-up shoot positioning, extensive cane raking and post-verasion cane shortening; some leaf pulling (and in limited cases, cane removal). We also conducted a smaller subset evaluation of shoot thinning versus the aforementioned vineyard practice serving as a check.

Dormant season pruning and training were carried out the same on all vines. During initial growth, all tertiary shoots and some secondary shoots (where there were fruitful primary shoots) were rubbed off aiming for a given target number of shoots, regardless of spacing or potential crowding and shading.

Using three varieties GR-7, Lacrosse, and Servos. We established comparisons of shoot thinning practices as those of the check on each. Every grape cultivar has 4 panels of three vines each, or 12 vines in all. We alternated panels of the three target cultivars between shoot thinning and the control. And so, six vines of each of the three cultivars were in each treatment.

Ideally, we would hope to see fewer clusters of greater weight in the shoot thinned treatment than the control, with the implication that crop load reduction would induce greater fruit carbohydrate accumulation (sugars) due to fewer sinks, and the berries would be more valuable. Larger clusters would also be more efficient where hand harvesting was being employed.

Generally, the shoot-thinned vines carried fewer clusters of greater weight, and the trend held across both individual cultivars and for the overall treatment. (See Table 4.) Only two of the 18 shoot-thinned vines carried more clusters than did the controls. Overall yield levels in kg were petty comparable overall, except for Lacrosse. A larger experiment (i.e. more individual vines per cultivar) likely would better clarified treatment impacts. Unfortunately, in the press of multiple harvests in two crops, and the coordination of grape volunteers, the need for distinct sub-harvests in the respective cultivars - and treatments - was missed. Consequently, juice characteristics of Brix, pH, and TA could not buttress the value of the observed trend. Indeed, in a wet year, the larger berry size may have been a disadvantage to flavors development.

As to overall vineyard production (irrespective of the above comparison) we did manage to shift the modal output of the vineyard cultivars to a more desirable 5-6 projected tons per acre range (see Table 1), which was up from the 4-5 ton picture of 2008. Nevertheless, outliers were still present, and were at either ends of an even wider range than in 2008 (2.81 to 9.23 versus 3.33 to 8.62). Complicating factors were many - the weather primarily (the latter providing both a cautionary tale and highlighting a success; more of that in a moment).

Production was also affected by a switchover from a 4 arm Umbrella Kniffen system to a top wire cordon system in the spring of 2009. The change was done to facilitate more straightforward pruning with volunteers, but to also remove multiple trunk "insurance" against winter injury (as practiced in the Finger Lakes) and to allow for movement into cultivar-specific approaches in time. The removal of the "insurance" was in keeping with evaluating overall comparative tolerance to cold temperatures.

Although we believed we were leaving adequate bud counts for the most part, based upon dormant one-year wood pruning, the changeover likely induced more variability in yields and cluster counts, as some of the vines may not have had inadequate adequate remaining vine structure. However, yields were not markedly different on most cultivars.

Marked mammalian predation also occurred as a novel and unpleasant introduction! Although we had anticipated avian predation and had employed bird netting, we discovered quite near to maturity, that chipmunks and likely other pests were moving within the netting and defruiting many clusters; for some cultivars this represented fairly extensive loss. (Refer to tables 1, 2, and 4).

Returning to weather. At the time of this report, only the Brix juice values of the 10 wines being locally-made (See Table 3) were available. (The remaining harvest berry samples are in frozen storage awaiting analysis.) We do not expect values to be as favorable as 2008 due to the extent of cool, rainy, and especially cloudy conditions during the 2009 season - particularly in late summer to early fall. July's brief burst of heat did help.

Our abbreviated season (the 2009 autumn was neither as long nor as warm as 2007, or 2008) provided a heads-up as to the importance of cultivar's short-season maturation ability. While all

of our "wines" brix readings were down from 2008 (varying from drops of 0.7 to 5.3) Marquette interestingly still managed to come in at 20.6 (21.8 in 2008).

As one might expect, the wetness provided a test of our more normative pest concerns, namely several fungal diseases. It became evident to Lamoy and Iungerman, that our existing sprayer was insufficient to a mature vineyard's expanded canopy - and even less so at a time of high disease. Even well executed IPM procedures utilizing monitoring, open canopy practices, and protectant applications during bloom, still hinged on good coverage when needed. We were able to fashion a new spray apparatus from catalog parts and welded bars. Richard Lamoy ably-designed and executed the fabrication of the replacement spray apparatus.

How well did our measures do? In a season when clean vineyards were rare in NY, the Willsboro Trial was disappointing to Cornell Plant pathologist Wayne Wilcox when he visited, saying in effect, there's "nothing to see" (disease-wise). Not only was the vineyard without disease problems, it was done with minimal sprays compared to more prevalent practices. Field sessions at Willsboro and at area vineyards honed in on these IPM practices. See Table 5, and the photos following, for details on the spray program and timing, and information about the sprayers used and the cost of the spray program.

Finally, in 2009, two separate sets of wines are in process (See Table 3). Locally made wines of a "commercial" character are being made from ten of the Willsboro wine grapes cultivars; these include four reds (Marquette, Sabrevois, St. Croix, and Frontenac) and six whites (LaCrescent, Petite Amie, NY 76.844.24, Prairie Star, St. Croix, and St. Pepin).

A separate set of research wines is being made of most of the same wines at the Cornell Wine Lab. These latter wines are intended to distinguish the "skeletal" or baseline characteristics of the grapes involved (i.e. distinct from the sales appeal of a commercial marketing focus.) Due to harvest shortages of Marquette and Petite Amie, these are only being made locally.

At our well-received wine evaluation and tasting sessions of 2007 Willsboro wines at Westport and Granville in June, 2009, it was the whites that appeared to receive the more favorable reception, and accordingly, we tipped more to whites for 2009. We also elected to have the two parallel wine tracks in response to the interest for such growing out of these sessions.

Conclusions/Outcomes/Impacts:

- Hardiness differences are beginning to show, and of the 25 cultivars planted, nine appear to be doing very well, including Frontenac, Frontenac Gris, LaCrescent, Louise Swenson Petite Amie, St. Croix, Marquette, and MN 1200.
- Generally, shoot-thinned vines carry fewer clusters of greater weight, the trend holding pretty well across individual cultivars and cumulatively.
- Canopy management techniques did manage to shift the modal output of the vineyard cultivars to a more desirable 5-6 projected tons per acre range.
- Our abbreviated 2009 summer and autumn underscored the importance of cultivar's short-season maturation ability.

- Despite rather unfavorable degree-day (heat) accumulation, the Marquette grape interestingly managed to still come in at 20.6 Brix (21.8 in 2008).
- It was our Willsboro whites (2008) that appeared to receive the more favorable reception at our wine evaluation and tasting sessions at Westport and Granville in June 2009. Accordingly, we tipped more to whites for the 2009 wine making. (Marquette was the red exception.)
- We elected to have the two parallel wine tracks - one research, one commercial - to more fully explore the potential of regionally developed wines.
- Well-executed IPM procedures and effective sprayers can achieve excellent disease control in disease-intense seasons and do so with fewer sprays and at reasonable cost.

2009 Outreach:

Apr 18 Sat *- Willsboro Grape Trial Pruning and Instruction with volunteers.*
May 28 *- Evening Distance Education Grape Sessions with Drs. Wilcox and Vanden Heuvel (at Geneva) to Hudson Falls and Plattsburgh.*
Jn 2 *- Evaluation and review of 2008 Willsboro Grape Trial Wines, Westport.*
Jn 3 *- Area vineyard visits with Cornell enologist Mansfield and Extension enologist Chris Gerling in Clinton and Essex counties.*
Jn 3 *- Evaluation and review of 2008 Willsboro Grape Trial Wines, Granville.*
Jn 4 *- Area vineyard visits with Cornell enologist Mansfield and Extension enologist Gerling in Albany and Washington counties.*
Jn 4 *- Area vineyard visits with Cornell enologist Mansfield and Extension enologist Gerling in Albany and Washington counties.*
Jly 17 *- Vineyard visits with Drs. Wilcox and Vanden Heuvel in Albany, Saratoga, and Clinton counties.*
Jly 18 *- Joint Grape Extension Program with the University of VT featuring Drs. Wilcox and Vanden Heuvel, South Burlington, VT (morning) and Willsboro, NY (afternoon).*
Aug 25 *- NENYFP "Vit-L" on-line discussion of entry submission criteria to MN Wine Grape Growers Association International Cold Climate Wine Competition.*
Sep 8*. - Preparation and posting of "Vineyard Data Survey" to area grape growers soliciting plant demographic information.*
Sep 17, 18 *- Vineyard visits with Dr. Tim Martinson, of Cornell's Statewide Extension Grape Program. Clinton, Essex, Saratoga, Washington, and Albany counties.*
Sep 25, 26 *- Richard Lamoy conducts the first grape harvests at the Willsboro wine grape trial with volunteer help. Three varieties harvested.*
Oct 2 *- Lamoy oversees second Willsboro wine grape trial harvests with volunteer help. Thirteen varieties are harvested.*
Oct 10 *- Iungerman and Lamoy conducts the third and final grape harvests at the Willsboro wine grape trial with volunteer help. Nine varieties are harvested.*
Nov 12, 13 *- Iungerman participates with Martinson Mansfield, and Chris Gerling in the multi-state cold hardy grape research and extension sessions in Burlington.*

Next steps if results suggest continued work is needed in the areas of research, demonstration and/or education. Most of the region's vines were planted after the Willsboro trial (2005). In 2005, just 2 farm winery licenses were held in the five county NENY fruit program region; today, that count is 11; at the end of 2010, the count is projected to be 15. (Based upon an August 2009 grower survey by the NENYFP). In our Champlain and Upper Hudson areas, most vineyards intend to become estate wineries - a model set by several nearby VT operations. This requires development of viticulture and enology skill sets.

As 90% of vineyards are of a 'nonbearing' age, a majority of growers have yet to see a first crop; this will begin to change in 2010. Economically, practical information and demonstrations will be needed about these new cultivars for new practitioners to succeed. Growers need localized 'benchmarks' of yields, quality, fruit characteristics, and wine attributes that are attainable here, and information also about vine training, trellis construction, pest management, and wise use of protectants.

Success of wine grape growing in the North Country ultimately depends upon wine sales to consumers. To achieve their full potential, producers need to understand what flavors and wine styles are possible and how to adapt winemaking practices to bring out the best characteristics of these varieties. Wines made from the Willsboro trial will also serve as benchmarks for educating producers and illustrating wine production practices for all northern wine grape producers and winemakers

Acknowledgments: In closing, my thanks once again, to Steve Lerch, Cornell Grape Program, Geneva; Richard Lamoy who was an exceptional seasonal colleague; Mike Davis and the Cornell Willsboro Baker Farm Staff; the Willsboro volunteers Rob McDowell, Phil Favreau, Tod Trzaskos and a number of others; -- all of whom have assisted this year's work at the Willsboro Trial. Thanks too, to the Growers and CCE Extension Associations of CCE's NENY Commercial Fruit Program; CCE; and the Northern New York Agricultural Development Program, who provided the funding support for the technical and seasonal assistance and also the winemaking effort at Cornell and Hid-in-Pines Vineyard.

Person(s) to contact for more information (including farmers who have participated:

Richard Lamoy	Lamoy Vineyard	Morrisonville, NY	richl@charter.net
Rob McDowell	Purple Gate Vineyard	Plattsburgh, NY	redwine@charter.net
Will & Kathryn Reinhardt	Blue Stone Vineyards	Willsboro, NY	willkath@willex.com
Ed Lincoln	Maple Gate Farm	Randolph, VT	hvacr@sover.net
Peter Rowley	Edgewater Farm	Willsboro, NY	ewfarm38@airmail.net
Mike DiCrescenzo	Altamont Vineyard	Altamont, NY	altamontwinery@hotmail.com
Phil Favreau	Stone House Vineyard	Mooers, NY	stonehousevines@westelcom.com
Erwin Kalmar	(New 2009. Unnamed)	Champlain, NY	erwin@elso.ca

N. Peck, C. Read	North Star Vineyard	Mooers, NY	nataliepeck@yahoo.com
Todd Trzaskos	Vermont Logic	Stockbridge, VT	vino@trzaskos.net
Mike Spiak	Kayaderosseras Vnyd.	Greenfield Center, NY	spiaker@yahoo.com
Gerry Barnhart	Victoryview Vineyard	Schatigcoke, NY	gerryandmary@victoryviewvineyard.com
Ken Denberg	Natural Selection Farm	Cambridge, NY	krdenberg@logical.net
S. Knapp, D. Wilson	Slyboro Ciderhouse	Granville, NY	dan.wilson111@yahoo.com

Willsboro Grape Trial 2009 CCE Northeast NY Fruit Program, Cornell Baker Farm, Willsboro, NY.

Table 1: Comparative Wine Grape Vogor, Grow th Stage Phenology, Yield Information.

Nmber and ID of cultivars in Trial		Vigor[1] 2009	Representative 2009 Phenology (Grow th Stages) of vines.[2] (4)BB	(12)10cm	(19)Flow er	(23)50%CF	(27)BSet	(35)Veraison	(38)Harv	[3]kg/ Variety	[4]Proj kg/A	[5]Proj Tons/A
1	Baco	0.6	5/11	6/2	6/26	6/29	7/1	8/31	10/3	93.00	4608	5.07
2	Cayuga White*	0.4	5/20	6/11	7/6	7/10	7/15	8/31	10/5	71.70	3908	4.48
3	Edelw eiss	0.4	5/14	6/2	7/1	7/6	7/10	8/31	9/27	71.90	3265	3.59
4	ES 6-16-30**	0.4	5/20	6/8	6/29	7/3	7/10	8/26	9/27	29.80	1353	2.81
5	Foch*	0.2	5/9	5/27	6/26	7/1	7/6	8/31	10/3	91.20	4142	5.24
6	Frontenac*	0.5	5/9	5/27	6/23	6/26	7/1	8/26	10/11	141.60	6431	7.51
7	Frontenac Gris*	0.5	5/11	5/27	6/23	6/29	7/1	8/26	10/11	122.10	5545	6.10
8	GR7	0.6	5/9	5/27	6/29	7/1	7/6	8/26	10/3	123.20	5595	6.15
9	LaCrescent	0.3	5/9	5/27	6/23	6/29	7/6	8/26	10/3	138.20	6277	6.90
10	Lacrosse	0.5	5/14	6/8	6/29	7/1	7/10	8/26	10/3	158.10	7180	7.90
11	Landot*	0.5	5/21	6/11	7/6	7/10	7/17	8/31	10/11	93.30	4263	5.18
12	Leon Millot**	0.5	5/14	5/27	6/23	6/29	7/1	8/26	10/3	55.00	2725	4.18
13	Loiuse Sw enson**	0.3	5/14	6/2	6/29	7/1	7/10	8/26	9/27	59.30	2693	4.79
14	Marquette**	0.5	5/9	5/27	6/23	7/1	7/6	8/26	10/11	61.60	3052	4.08
15	Mn 1200**	0.2	5/14	5/27	6/21	6/23	7/1	8/26	10/3	22.20	1008	1.85
16	Niagara*	0.7	5/14	6/11	7/3	7/6	7/10	8/31	10/11	184.40	8375	9.23
17	Noiret*	0.5	5/14	6/2	6/29	7/6	7/11	8/31	10/3	79.90	3959	4.39
18	NY 76.844.24*	0.5	5/14	6/2	6/29	7/1	7/17	8/31	10/11	128.20	5822	6.50
19	Petiete Amie**	0.1	5/14	5/27	6/23	6/29	7/1	8/31	10/11	50.40	2747	4.17
20	Prairie Star**	0.5	5/14	6/2	6/29	7/1	7/6	8/26	10/3	85.20	3870	5.16
21	Unidentified (6)*	0.3	5/20	6/11	7/1	7/6	7/10	8/26	10/11	70.50	3202	3.74
22	Sabrevois*	0.7	5/14	6/2	6/23	6/29	7/6	8/31	10/3	135.20	6140	6.90
23	St. Croix*	0.5	5/9	6/2	6/29	7/3	7/6	8/31	10/3	119.10	5409	6.41
24	St. Pepin*	0.5	5/14	6/2	6/29	7/1	7/6	8/26	10/3	72.40	3288	3.85
25	Vignoles*	0.5	5/20	6/13	7/6	7/10	7/17	8/31	10/11	105.20	4778	5.29

1 Vineyard vigor estimation is a ratio: 1 yr dormant wood pruning weight (kg) per 14.63 m (8 ft in row spacing). Values for reps 1& 3 (50% each cultivar)
Adapted from "Factors Affecting Successful Vine Growth, Yield, and Quality", 1999 NYS Wine Industry Workshop, Dr. Helen Fisher, Univ. Guelph.

2 #s in ( ) reference Eichorn-Lorenz Phenological stages.. (Compendium Grape Diseases, APS Press, 1994, p 4.) BB is budburst; 10cm modal shoot growth; flowering begun; 50%CF is 50% flower caps shed; Bset berries growing & at R- angle to cane; veraison: onset berry maturation, coloration.

3-5 Yield in kg of each cultivar divided by # producing vines for per vn value. Times 545 (since 8' x 10'spacing) for per acre adjustment.

6 Unidentified vine: Preseumed Ravat at planting. Fruiting subsequently shown it was "Not-Ravat" (or simply unidentified).

* And * * indicates mamalian predation loss and more sever loss. See "M Loss" and "Eqv" values Table 2, and "P" Column Table 4.

Willsboro Grape Trial - 2009 CCE Northeast NY Fruit Program, Cornell Baker Farm, Willsboro, NY.

Table 2 - Comparative Vine Quality (And predation loss level estimation.)

Variety	# of vns	Tot # Clust.	Tot kg	kg/vn	Cluster Wt (g)	M loss # Clust.	Eqv* # Clust	Eqv* Wt tot kg	Eqv* Wt kg / vn	Brix	pH	TA	Berry Wt (g)	Yld / P Ratios	2010 % Lv node
Baco	11	1069	93	8.45	87	0	1069	93.00	8.45	-	-	-	-	5	-
Cayuga White	10	327	71.7	7.17	219.27	16	343	74.80	7.48	-	-	-	-	5.7	-
Edelweiss	12	521	71.9	5.99	138	0	521	71.90	5.99	-	-	-	-	6.5	-
ES 6-16-30	12	355	29.8	2.48	83.94	318	673	56.30	4.69	-	-	-	-	1.9	-
Foch	12	1189	91.2	7.60	76.7	178	1367	104.80	8.73	-	-	-	-	18	-
Frontenac	12	1031	141.6	11.80	137.34	63	1094	150.30	12.53	18	3.06	17.7	-	9.4	-
Frontenac Gris	12	833	122.1	10.18	146.58	12	845	123.90	10.33	18.8	2.88	15.1	-	8.7	-
GR7	12	1253	123.2	10.27	98.32	0	1253	123.20	10.27	-	-	-	-	6.6	-
LaCrescent	12	1294	138.2	11.52	106.8	0	1294	138.20	11.52	17.2	2.95	15.2	-	12.5	-
Lacrosse	12	1229	158.1	13.18	128.64	0	1229	158.10	13.18	-	-	-	-	10.4	-
Landot	11	586	93.3	8.48	159.22	10	596	95.00	8.64	-	-	-	-	8.5	-
Leon Millot	11	797	55	5.00	69.01	331	1128	76.70	6.97	-	-	-	-	3.3	-
Louise Swenson	12	575	59.3	4.94	103.13	389	964	95.80	7.98	-	-	-	-	4.5	-
Marquette	11	830	61.6	5.60	74.22	178	1008	74.90	6.81	20.6	3.02	10.5	-	2.9	-
Mn1200	12	635	22.2	1.85	34.96	426	1061	36.90	3.08	-	-	-	-	3.1	-
Niagara	12	942	184.4	15.37	195.75	2	944	184.70	15.39	-	-	-	-	9.8	-
Noiret	11	547	79.9	7.26	146.07	4	551	80.50	7.32	-	-	-	-	4.9	-
NY 76.844.24	12	870	128.2	10.68	147.36	6	882	130.00	10.83	14.6	2.83	13.5	-	7.8	-
Petite Amie	10	525	50.4	5.04	96	204	729	69.60	6.96	15.4	3.00	8.2	-	10.3	-
Prairie Star (*1)	12	981	85.2	7.10	86.85	225	1206	103.20	8.60	18.6	3.21	11.4	-	6	-
Ravat 34-not	12	404	70.5	5.88	174.5	22	426	74.80	6.23	-	-	-	-	6.9	-
Sabrevois	12	1165	135.2	11.27	116.05	27	1192	138.20	11.52	15	3.10	12.7	-	7.3	-
St. Croix	12	1233	119.1	9.93	96.59	71	1304	128.30	10.69	15	3.07	10.8	-	8.1	-
St. Pepin	12	752	72.4	6.03	96.28	52	804	77.10	6.43	19.6	3.06	10.1	-	4.2	-
Vignoles	12	761	105.2	8.77	138.24	5	766	105.80	8.82	-	-	-	-	8.2	-

Notes:

1. "M loss" and "Eqv" consider animal predation and estimate equivalent yield otherwise. ((Total Cluster Weight) / # Clusters) x (# intact clusters + empty clusters))
2. Thus "Eqv kg / vine" is adjusted weight of both intact ans predated clusters divided by # vines.
3. (*1) Prarie Star trained differently - to a 4 arm kniffen, not a top-wire cordon as its new spring cane growth is markedly sussceptibility to breakage by winds.
4. Brix, pH, and TA values for juice pressed in Morrisonville at Lamoy's Hid-in-Pines Vineyard & Winery in coooperation with CCE NENYF. All grapes from Trial.
5. The " - " entries refer to harvest samples yet to be processed (in frozen storage) - available later in Spring 09, as will be the % live 2010 buds data.

Willsboro Grape Trial - 2009 CCE Northeast NY Fruit Program, Cornell Baker Farm, Willsboro, NY.

Table 3 - Preliminary 2009 Wines Information

2009 Research "Skeletal" Willsboro Wines - CCE NENYF and Cornell Wine Lab, Geneva.

Cultivar / R or W		Wine Lab	Harv.	Juice Analysis			Treatment / Yeasts				Wine Bottling Information			
		V&B Code	2009	pH	TA	Brix				MLB	pH@	TA(g/L) @	Date	# bottles
Prairie Star	W	09-52	10/3	3.34	13.12	18	-	-		-	-	-	-	-
St. Pepin	W	09-53	10/3	3.20	14.00	19.9	-	-		-	-	-	-	-
La Crescent	W	09-54	10/3	3.10	19.04	18.3	-	g In Process (Jan 20		-	-	g In Process (Jan 2010)		-
Sabrevois	R	09-55	10/3	3.16	15.06	15.2	-			-	-			-
St. Croix	W	09-56	10/3	3.23	12.60	15	-			-	-			-
76.0844.24	W	09-87	10/11	3.04	17.38	15.6	-			-	-			-
Frontenac	R	09-88	10/11	3.06	22.44	18.6	-			-	-			-
Frontenac Gris	W	09-94	10/11	3.09	20.96	19.7	-	-		-	-	-	-	-

2009 "Commercial" Willsboro Wines - CCE NENYF and RL Wines (Hid-in-Pines Vineyard), Morrsionville.

Cultivar		NENYF/RL_	Harv.	Juice Analysis			Treatment / Yeasts				Wine Bottling Information			
		V&B Code	2009	pH	TA	Brix	Chaptalized	Yeast		MLB	pH@	TA(g/L) @	Date	# bottles
Prairie Star	W	09-52RL	10/3	3.21	11.4	18.6	21brix	Cotes des Blancs		none	-	-	-	-
St. Pepin	W	09-53RL	10/3	3.06	10.1	19.6	21brix	Cotes des Blancs		none	-	-	-	-
La Crescent	W	09-54RL	10/3	2.95	15.2	17.2	21brix	Cotes des Blancs		none	-	g In Process (Jan 2010)		-
Sabrevois	R	09-55RL	10/3	3.10	12.7	15	21brix	RC212		none	-			-
St. Croix	R	09-56RL	10/3	3.07	10.8	15	21brix	Pasteur Red		none	-			-
76.0844.24	W	09-57RL	10/11	2.83	13.5	14.6	21brix	71B-1122	&&&	none	-			-
Frontenac	R	09-58RL	10/11	3.06	17.7	18	21brix	71B-1122	&&&	Bacchus	-			-
Frontenac Gris	W	09-59RL	10/11	2.88	15.1	18.8	21brix	71B-1122	&&&	none	-	-	-	-
Marquette***	R	09-60RL	10/11	3.02	10.5	20.6	21brix	RC212		MBR31	-	-	-	-
Petite Amie***	W	09-61RL	10/11	3.00	8.2	15.4	21brix	Cotes des Blancs		none	-	-	-	-

Notes:
1. All of these wines being made from grapes grown in the CCE NENYF Wine Grape Trial, Cornell Baker Farm, Willsboro, 2009.
2. The " - " indicates winesIn process as of January 29, 2010. Bottling will not occur until later in 2010.
3. The *** indicates Insufficient amount to supply quanitity need of Geneva Wine Lab. Retained for NENYF local wine making.
4. The &&& indicates that this yeast converts up to 40% malic acid to lactic acid.

Willsboro Grape Trial - 2009 CCE Northeast NY Fruit Program, Cornell Baker Farm, Willsboro, NY.

Table 4 - Canopy Manaagement - Shoot Thining

Mgmnt	Variety	Panel	Cluster Data Vine 1 #	"P"	Wt kg	Equiv Wt.*	Cluster Data Vine 2 #	"P"	Wt kg	Equiv Wt.*	Cluster Data Vine 3 #	"P"	Wt kg	Equiv Wt.*	Panel Sums # Cls	Eqv * Cls #	kg Total	Eqv * Wt - kg	Panel Means - Vns, Cls kg / Vn	Eqv * Wt kg / vn	g/Cls	Projections MT / A	Eqv * MT / A	Mean Proj. Eqv * MT / A / Var	/ Trt
Shoot Thinned	GR7	3.2	87	0	9.8	9.8	69	0	6.8	6.8	94	0	11	11.3	250	250	27.9	27.90	9.30	9.30	111.60	5.1	5.1		
	GR7	7.10	105	0	12	11.6	75	0	7.9	7.9	156	0	15	15.2	336	336	34.7	34.70	11.57	11.57	103.27	6.3	6.3		
			192	0	21	21.4	144	0	15	14.7	250	0	27	26.5	586	586	62.6	62.60	10.43	10.43	107.44	11.4	11.4	5.69	
	Lacrosse	3.3	85	0	13	13.1	90	0	12	11.5	51	0	6.9	6.9	226	226	31.5	31.50	10.50	10.50	139.38	5.7	5.7		
	Lacrosse	7.5	85	0	13	13.4	80	0	12	12.4	83	0	13	12.6	248	248	38.4	38.40	12.80	12.80	154.84	7.0	7.0		
			170	0	27	26.5	170	0	24	23.9	134	0	20	19.5	474	474	69.9	69.90	11.65	11.65	147.11	12.7	12.7	6.35	
	Sabrevois	1.8	80	0	11	10.6	108	0	13	13.2	100	0	12	11.7	288	288	35.5	35.50	11.83	11.83	123.26	6.4	6.4		
	Sabrevois	7.6	83	0	11	11.3	98	0	11	11.4	120	0	13	12.6	301	301	35.3	35.30	11.77	11.77	117.28	6.4	6.4		
			163	0	22	21.9	206	0	25	24.6	220	0	24	24.3	589	589	70.8	70.80	11.8	11.65	120.27	12.9	12.9	6.43	
	All Shoot Thinned		525	0	70	69.8	520	0	63	63.2	604	0	70	70.3	1649	1649	203.3	203.3	33.9	33.7	124.94	36.9	36.9	All	6.16
Control	GR7	3.7	115	0	9.7	9.7	112	0	9.8	9.8	125	0	13	13.2	352	352	32.7	32.70	10.90	10.90	92.90	5.9	5.9		
	GR7	10.7	78	0	7.8	7.8	118	0	10	10.4	119	0	9.7	9.7	315	315	27.9	27.90	9.30	9.30	88.57	5.1	5.1		
			193	0	18	17.5	230	0	20	20.2	244	0	23	22.9	667	667	60.6	60.6	10.1	10.1	90.73	11.0	11.0	5.50	
	Lacrosse	4.8	201	0	15	15.0	109	0	15	15.1	120	0	16	15.8	430	430	45.9	45.90	15.30	15.30	106.74	8.3	8.3		
	Lacrosse	10.2	97	0	14	14.4	108	0	14	13.6	120	0	14	14.3	325	325	42.3	42.30	14.10	14.10	130.15	7.7	7.7		
			298	0	29	29.4	217	0	29	28.7	240	0	30	30.1	755	755	88.2	88.2	14.7	14.7	118.45	16.0	16.0	8.01	
	Sabrevois	3.6	105	0	11	10.8	113	0	13	12.6	111	0	14	13.7	329	329	37.1	37.10	12.37	12.37	112.77	6.7	6.7		
	Sabrevois	9.9	56	27	6.2	9.2	115	0	13	13.0	76	0	8.1	8.1	247	274	27.3	30.29	9.10	10.10	122.63	5.0	5.5		
			161	27	17	20.0	228	0	26	25.6	187	0	22	21.8	576	603	64.4	67.39	10.73	11.23	117.70	11.7	12.2	6.12	
	All	Controls	652	27	64	66.9	675	0	75	74.5	671	0	75	74.8	1998	2025	213.2	216.2	35.5	36.0	108.96	38.7	39.3	All	6.55

* "Eqv" refers to calculations done to offset mamalian predation impact ("P"). All clusters - stripped and intact were counted. Intact were weighed, averaged, and then applied to stripped cluster. In this particular population of vines for the cnopy management comparison, only one panel - Sabrevois in Panel 9.9 - were so affected. Damage occurred in other discrete locations in the vineyard. This "Eqv" calculation was done across the grape trial where this problem was noted. Overall, it reflected damage that had not been experienced before (Vines were netted against birds.) Chipmunks and perhaps other animals/birds caused the loss. Missing clusters counted and weight calclations were made to help adjust dorman pruning levels in Spring 2010.

Other Notes: Each Treatment included 18 vines (2 panels each of 3 varieties, each panel having 3 vines)
Panel number refers to row, first and then panel postion within row. Rows progression E to W.
Ten panels are in each row. Each panel has 3 vines of a given cultivar. Vines, panels are numbered S to N.
Spacing: 8'x10' (545 vines /acre). Total area approximately 0.7 acres.

Colors: Relative panel position on slope.
Upper Third (P 7-10)
Middle Third (panels 4,5,6)
Lower Third (panels 1-3)

Willsboro Grape Trial - 2009 CCE Northeast NY Fruit Program, Cornell Baker Farm, Willsboro, NY.

Table 5 - Willsboro Vineyard IPM Program - Spray Events, Pests, Cost.

# Spray Events,	Date	Purpose,	Product Name,	Type	EPA Reg No.	Rate	Total Product	Tot. Gal. Sol.	application Method	Cost Per Unit	Cost This Application
1	4/30/13	Perennial Weeds	Roundup	H	524-475	2 qt./ A.	1 qt.	30	Spot Sprayer	$30.25	$30.25
2	6/4/13	powdery mildew	Rubigan	F	10163-273	3 oz../A.	2 oz.	25	Mini-Airblast	$4.15	$9.30
		powdery mildew	Manzate 75 Pro	F	1812-414-352	4 lb./A.	2.5 lb.			$8.08	$20.20
3	6/25/13	Anthracnose	Rally	F	62719-410	5 oz./ A.	3 oz.	25	Mini-Airblast	$4.89	$14.67
		Black Rot	Manzate Pro	F	1812-414	4 lbs./A.	2.0 lb.			$8.08	$16.16
		Rose Chafer	Sevin XLR	I	264-333	1.5 qt/A.	1.5 pt.			$9.73	$7.30
4	6/25/13	Perrenial & Annual Weeds.	Roundup	H	524-475	8 oz./5gal.	1/2 qt.	10	Spot Sprayer	$30.25	$15.13
5	7/11/13	Anthracnose, Powdery Mildew	Rally	F	62719-410	6 oz./ A.	4 oz.	75	Grape Boom Sprayer	$4.89	$19.56
		Downey Mildew	Captan 4L	F	19713-156	1.5 qt/A.	1 qt.			$8.00	$8.00
		Rose Chafers, Japanese Beetles,	Carbaryl 4L	I	34704-447	1.5 qt/A.	1 qt.			$9.73	$9.73
6	7/24/13	Powdery Mildew	Rubigan EC	F	10163-273	6 oz. / A.	4 oz	55	Grape Boom Sprayer	$4.15	$16.60
		Black Rot, Downy Mildew	Captan 4L	F	51036-181	2 qt./A.	1.25 qt.			$8.00	$10.00
		Downy Mildew	Prohy	F	42519-22-5905	2 qt/A.	1.25 qt.			$12.75	$15.94
		Japanese Beetle	Sevin XLR	I	264-333	2 qt/A.	1.25 qt.			$9.73	$12.16
7	9/2/13	Powdery Mildew, Botrytis	Flint	F	264-277	4 oz. / A.	3 oz	60	Grape Boom Sprayer	$7.09	$21.27
		Downy Mildew	Captec 4L	F	51036-181	2 qt./A.	1. 5 qt.			$8.00	$12.00

Notes:

Total Acreage: 0.66acres. "Spot Sprayer" - Hand-held wand.
"MiniAirblast": A 30 gallon BDI P-30 small acres sprayer, featuring aCifarelli 5HP gas engine blower with single-sided fan-type sprayhead. A 12V pump powers the agitator and supplies the sprayhead.
"Grape Boom Sprayer": A modified spray boom apparatus , with adjustable booms on each side (move in or out), each with 6 spray nozzles, the top having angling capability. Spray volume tank of 50-100 gal., sprays from 40-60psi. Apparutus and mounting frame fashioned by program technician Richard Lamoy.

Seasonal Herbicide Cost	$45.38
Seasonal Insecticide Cost	$29.19
Seasonal Fungicide Cost	$163.70
Total Seasonal Protectant Cost	$238.27
Per Acre Projection	$316.90

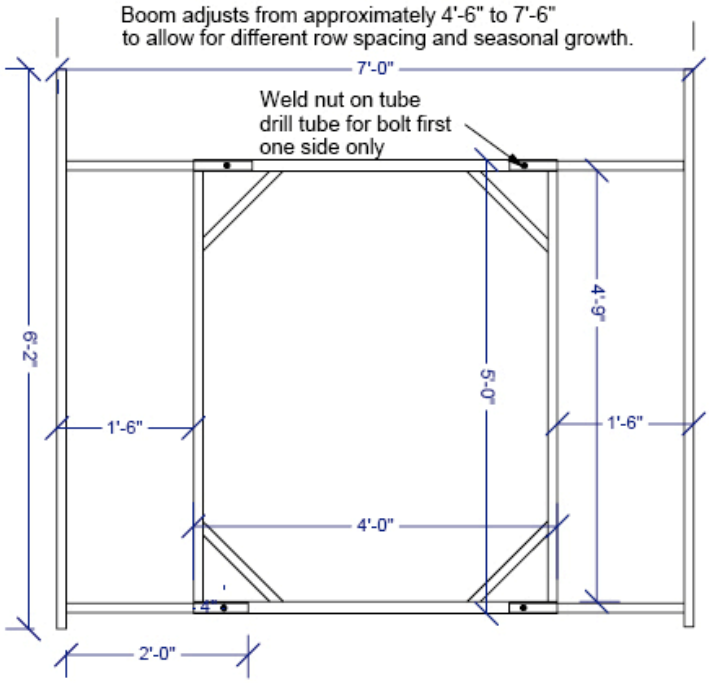

Diagram by R. Lamoy, Technician, CCE NENYF July 2009.